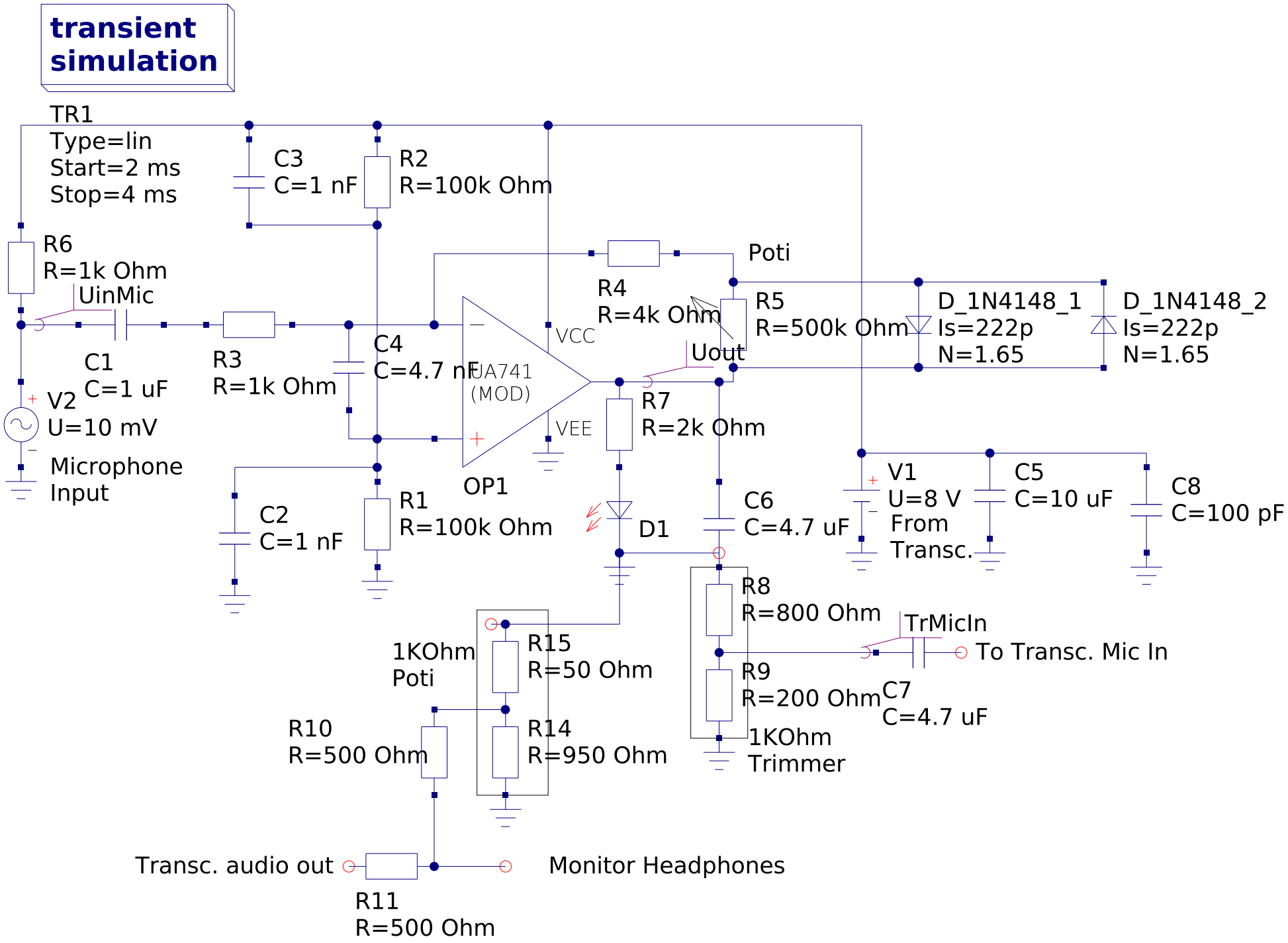
transient simulation
TR1
Type=lin
Start=2 ms
Stop=4 ms
C3
C=1 nF
R2
R=100k Ohm
R6
R=1k Ohm
UinMic
C1
C=1 uF
R3
R=1k Ohm
C4
C=4.7 nF
V2
U=10 mV
Microphone Input
C2
C=1 nF
R1
R=100k Ohm
OP1
UA741
(MOD)
VCC
VEE
R4
R=4k Ohm
Poti
R5
R=500k Ohm
Uout
D_1N4148_1
Is=222p
N=1.65
D_1N4148_2
Is=222p
N=1.65
R7
R=2k Ohm
D1
C6
C=4.7 uF
V1
U=8 V
From Transc.
C5
C=10 uF
C8
C=100 pF
R8
R=800 Ohm
TrMicIn
To Transc. Mic In
R9
R=200 Ohm
C7
C=4.7 uF
1KOhm Trimmer
1KOhm Poti
R15
R=50 Ohm
R14
R=950 Ohm
R10
R=500 Ohm
Transc. audio out
Monitor Headphones
R11
R=500 Ohm